INDIVIDUAL HYDRAULICS

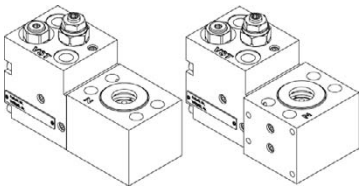

Check Valve, Pilot operated SAE 3/4", SAE 1", SAE 1 1/4"

1 General

Pilot operated check-valves are used to hold a cylinder solidly in one position.

1.1 Applications

Since leakage occurs in the neutral setting on directional control valves in slider construction and therefore leads to the load dropping, pilot operated check valves are used.

Valve operation must be absolute leakage free. The valve is made in seat construction with hardened components.

The check valve release is hydraulic controlled by pilot control pressure.

1.2 Mounting Location (Recommendation)

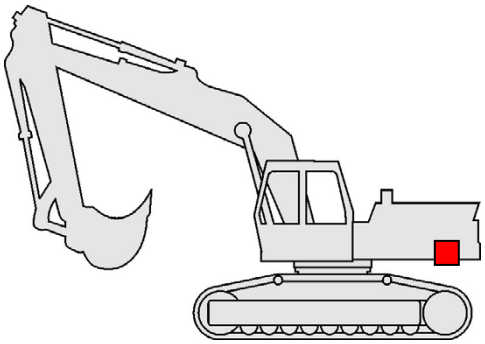

The pilot operated check valve is flanged directly on the control valve. The installation on the control block prevents the hoses from emptying through the play in the main slider.

2 Function

Flow is through the P connection into the cylinder through a check valve. When the flow is not moving through, the Z connection is blocked, leakage free.

The pilot operated check-valve is opened via the hydraulically actuated pilot control.

In order to prevent decompression shocks, the check-valve opens before the main control. The pilot valve opens to the leakage oil with hydraulic actuation allowing the volume flow from Z to P because of a pressure difference on the main ball.

The opening start of the check-valve is at approximately 6 bar and must be applied before opening start for the main control.

To protect the cylinder from external influences, a pilot pressure limiting valve is integrated. The pilot valve must be set approximately 10 bar lower than the pressure limiting valve of the main control.

3 Characteristics

- Can be flanged directly on the controller
- Compact construction
- With pressure limiting valve
- Good characteristics

4 Hydraulic Diagram

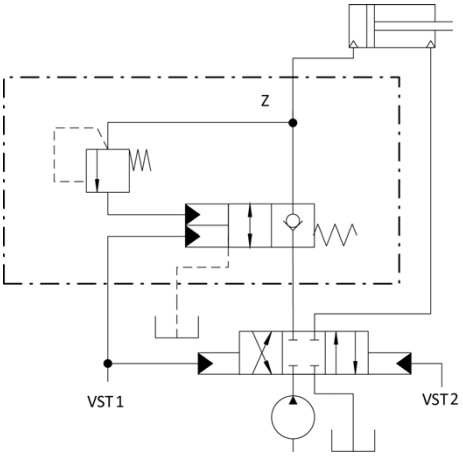

Connections:

P	From control block
Z	Cylinder connection
VSt	Pilot connection
L	Leakage oil connection

5 Technical Data

5.1 General

Installation Position:	Optional, fastened with SAE flange on control block
Weight:	
¾“	3,3 Kg
1“	3,7 kg
1 ¼“	4,5 kg
Maximum input pressure:	420 bar
Adjustable maximum operating pressure of additional consumers	400 bar
Pilot Ratio:	63:1
Connections and designations	
P, Z:	
426.063.282.9	SAE 3/4" 6000psi ISO6162
426.063.283.9	SAE 3/4" 6000psi ISO6162
427.063.282.9	SAE 1" 6000psi ISO6162
427.063.283.9	SAE 1" 6000psi ISO6162
428.063.282.9	SAE 1 1/4" 6000psi ISO6162
428.063.283.9	SAE 1 1/4" 6000psi ISO6162
VSt, L	G ¼" ISO 1179-1

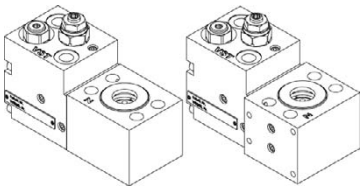

INDIVIDUAL HYDRAULICS

5.2 Hydraulics

Tank pressure:	< 1 bar
Input volume flow:	see diagram in capter 5.3
Hydraulic fluid:	Mineral oil (HL, HLP) conforming with DIN 51524, other fluids upon request
Hydraulic fluid temperature range:	-20 – +80 °C
Environmental temperature:	< +50 °C
Viscosity range:	2.8 – 500 mm^2/s
Contamination grade:	Filtering conforming with NAS 1638, class 9, with minimum retention rate $\beta_{10} \geq 75$

5.3 Pressure Loss

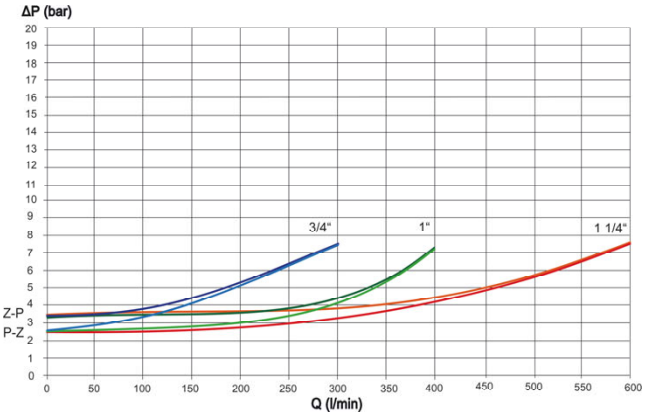

5.4 Standards

The following standards are to be observed because of the surface temperatures on the pilot operated check valve:

- EN 563
  Temperatures on surfaces that can be touched.
- EN 982
  Safety-technical requirements for fluid-technical systems and their components.

6 Installation

General Information

- All installation and safety information from the construction machine manufacturer are to be observed.
- Only technically permitted changes are to be made on the construction machine.
- The user has to ensure that the device is suitable for the respective application.
- Application exclusively for the range of application specified by the manufacturer.
- Before installation or deinstallation, the hydraulic system is to be depressurized.
- Settings are to be made by qualified personnel only.
- Opening is only to be performed with the approval of the manufacturer, otherwise the warranty is invalidated.
- No responsibility is taken for the correctness of these installation recommendations, the functionality and the technical details of the construction machine must be checked.

6.1 Installation

The pilot operated check-valve is flanged directly onto the connection of the main control. Fastening is done with the fastening bolts of the SAE flange.

Bolts of strength class 12.9 are to be used.
SAE ¾“ - Tightening torque = 85 Nm.
SAE 1“ - Tightening torque = 95 Nm.
SAE 1 ¼“ - Tightening torque = 150 Nm.

6.2 Connection Dimensions

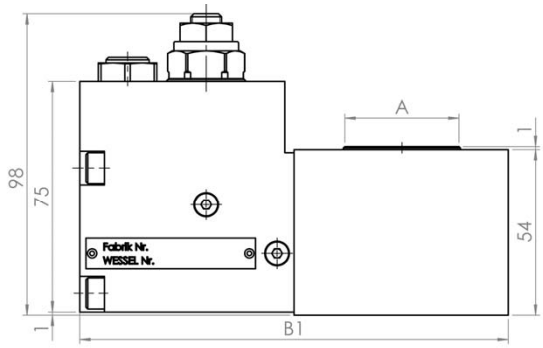

426.063.282.9, 427.063.282.9, 428.063.282.9

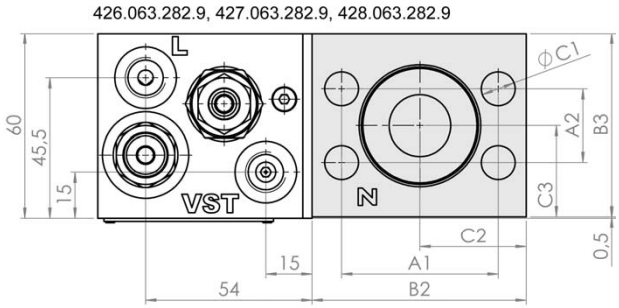

426.063.283.9, 427.063.2839, 428.063.283.9

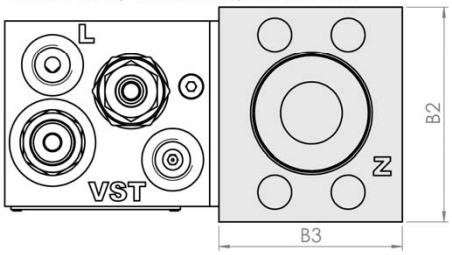

	A	B1	A1	A2	B2	B3	C1	C2	C3
426.063.282.9	37	139	50,8	23,8	69,5	59,5	11	34,5	29,5
426.063.283.9	37	129	50,8	23,8	69,5	59,5	11	34,5	29,5
427.063.282.9	44	149	57,2	27,8	79,5	69,5	13	39,5	34,5
427.063.283.9	44	139	57,2	27,8	79,5	69,5	13	39,5	34,5
428.063.282.9	51	169	66,6	31,8	99,5	79,5	15	49,5	39,5
428.063.283.9	51	149	66,6	31,8	99,5	79,5	15	49,5	39,5

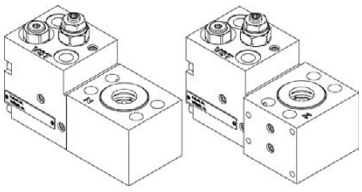

6.3 Connection Recommendations

SAE 1”

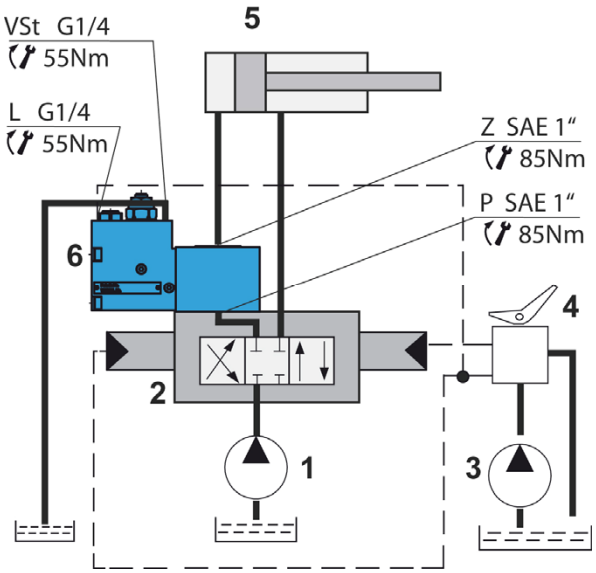

1 Pump
2 Main control
3 Pilot circuit pump
4 Signal transducer
5 Cylinder
6 Corr. check-valve

7 Settings

7.1 Opening level

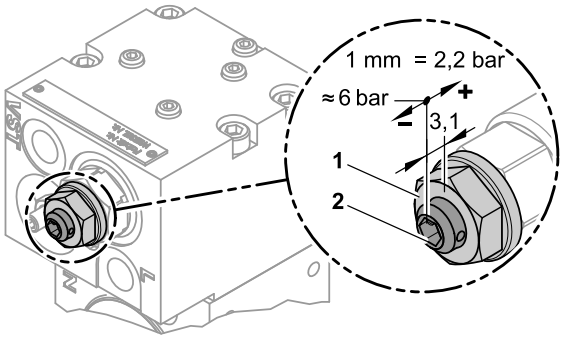

The opening start of the check valve is factory-set by means of pilot control pressure 6 bar.

a. Undo the counter-nut (1).

b. Pilot control pressure

Increase: Turn the set-screw (2) to the right.

Decrease: Turn the set-screw (2) to the left.

c. Tighten the counter-nut (1) 1 mm corresponds to 2.2 bar. Setting below 5 bar is not allowed.

7.2 Pressure valve

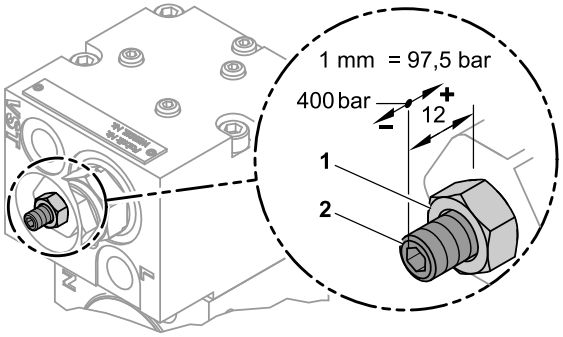

The opening start of the pressure valve is preset to 400 bar in the factory.

a. Undo the counter-nut (1).

b. Pressure

Increase: Turn the set-screw (2) to the right.

Decrease: Turn the set-screw (2) to the left.

c. Tighten the counter-nut (1). 1 mm corresponds to 97,5 bar. A setting of 400 bar is not allowed.